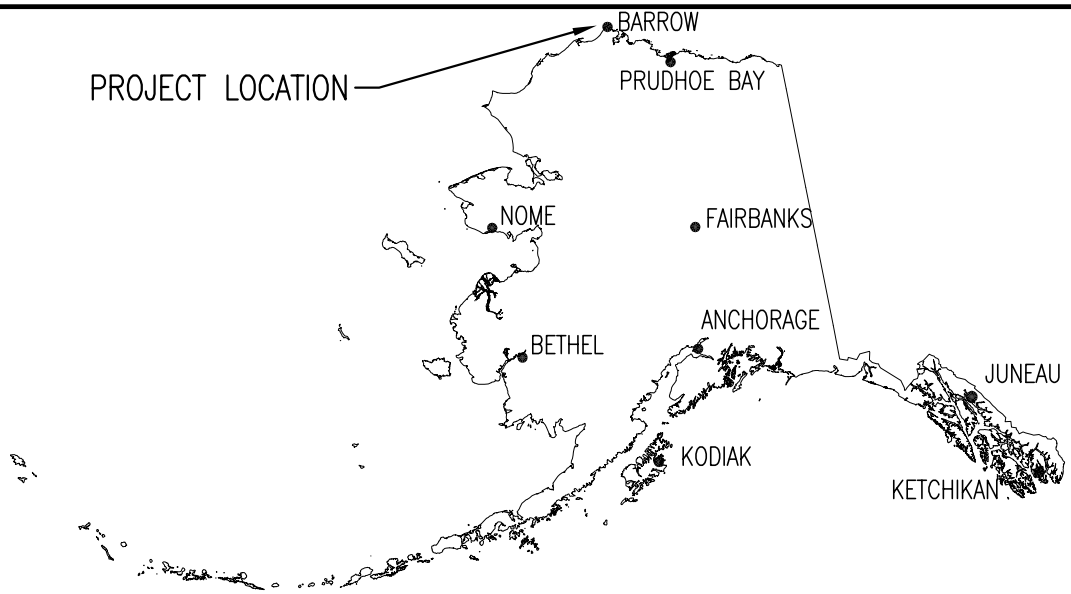

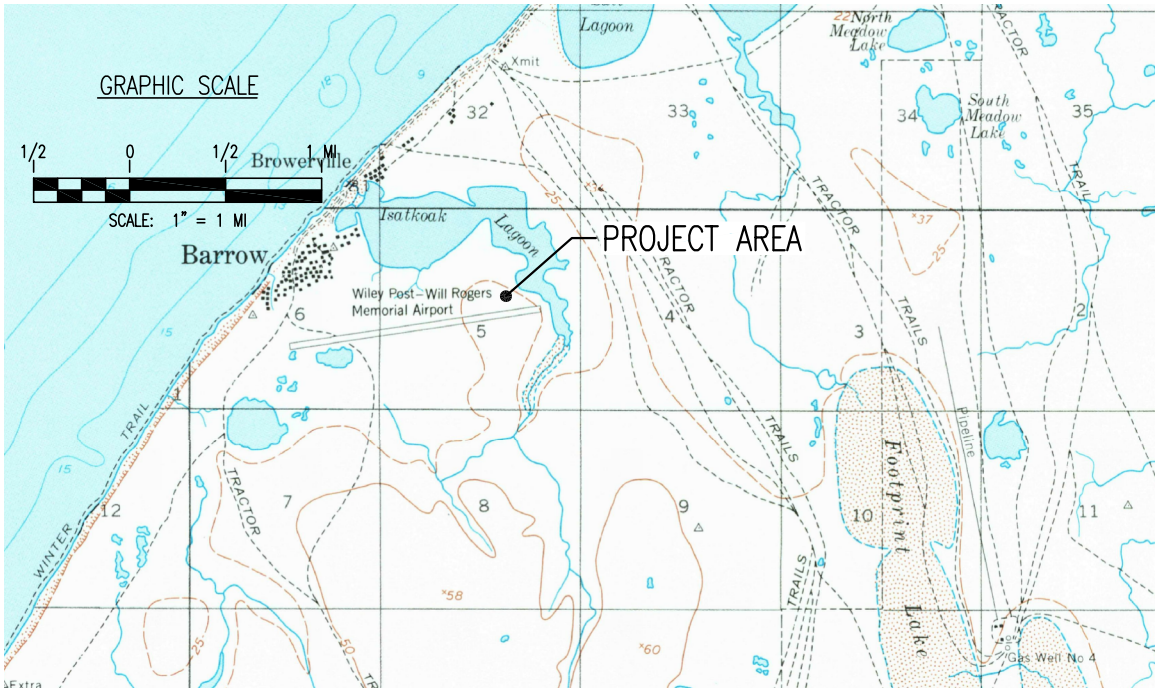

N

LOCATION AND VICINITY MAP

SHEET NO.: 1 OF 4

ENTERPRISE ENGINEERING, INC.

5 DEPOT STREET
SUITE 23
FREEPORT, ME 04032
TEL. (207) 869-8006
FAX (207) 869-8015

2525 GAMBELL STREET
SUITE 200
ANCHORAGE, AK 99503
TEL. (907) 563-3835
FAX (907) 563-3817

APPLICANT: NORTH SLOPE BOROUGH
FILE NO.: POA-XXX-XXX
WATERWAY: NUNAVAK BAY – FRONTAL CHUKCHI SEA (HUD 12: 190602020203)
PROPOSED ACTIVITY: SEARCH AND RESCUE (SAR) HANGAR
SEC. 5 T22N R18W U.M
LAT.: 71°17'15" N LONG.:156°45'14" W
DATE: 7/10/2015

Plot Date: Jul 10, 2015 – 2:21pm Drawing File: P:\projects\8399\Cad\Current Dwg 's\Civil\SKETCH PLANS\SK-1.dwg Last modified by: vhm

POA-2015-323
North Slope Borough
Isatkoak Lagoon
Sheet 1 of 4

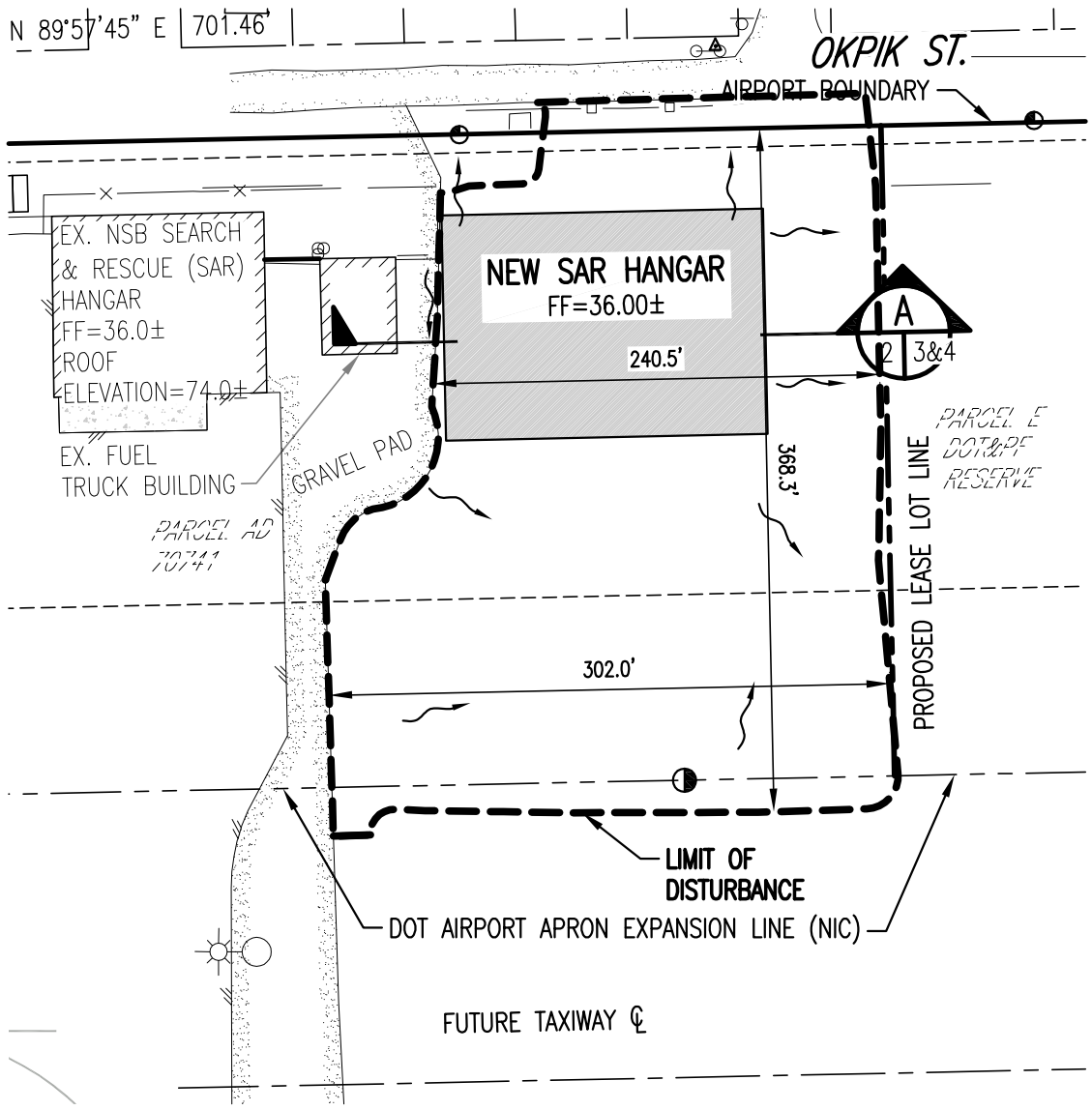

GRAPHIC SCALE

50 0 50 100 FT

SCALE: 1" = 100'

N

SITE PLAN

SCALE: 1" = 100'

SHEET NO.: 2 OF 4

ENTERPRISE ENGINEERING, INC.

5 DEPOT STREET
SUITE 23
FREEPORT, ME 04032
TEL. (207) 869-8006
FAX (207) 869-8015

2525 GAMBELL STREET
SUITE 200
ANCHORAGE, AK 99503
TEL. (907) 563-3835
FAX (907) 563-3817

APPLICANT: NORTH SLOPE BOROUGH
FILE NO.: POA-XXX-XXX
WATERWAY: NUNAVAK BAY - FRONTAL CHUKCHI SEA (HUD 12: 190602020203)
PROPOSED ACTIVITY: SEARCH AND RESCUE (SAR) HANGAR
SEC. 5 T22N R18W U.M
LAT.: 71°17'15" N LONG.:156°45'14" W
DATE: 7/10/2015

Plot Date: Jul 10, 2015 - 2:22pm Drawing File: P:\projects\8399\Cad\Current Dwg %\Civil\SKETCH PLANS\SK-2.dwg Last modified by: vhm

POA-2015-323
North Slope Borough
Isatkoak Lagoon
Sheet 2 of 4

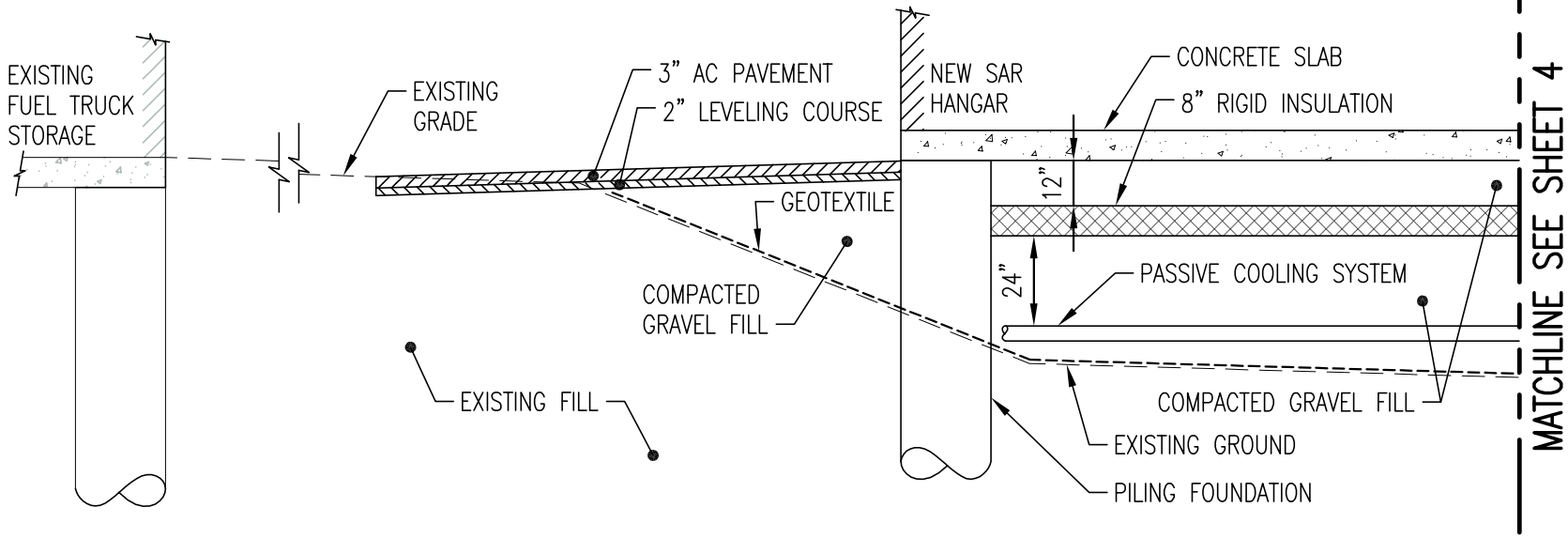

A
2 3

SITE SECTION

SCALE: NTS

SHEET NO.: 3 OF 4

ENTERPRISE
ENGINEERING, INC.

5 DEPOT STREET
SUITE 23
FREEPORT, ME 04032
TEL. (207) 869-8006
FAX (207) 869-8015

2525 GAMBELL STREET
SUITE 200
ANCHORAGE, AK 99503
TEL. (907) 563-3835
FAX (907) 563-3817

APPLICANT: NORTH SLOPE BOROUGH
FILE NO.: POA-XXX-XXX
WATERWAY: NUNAVAK BAY – FRONTAL CHUKCHI SEA
(HUD 12: 190602020203)
PROPOSED ACTIVITY: SEARCH AND RESCUE (SAR) HANGAR
SEC. 5 T22N R18W U.M
LAT.: 71°17'15" N LONG.:156°45'14" W
DATE: 7/10/2015

Plot Date: Jul 10, 2015 - 2:22pm Drawing File: P:\projects\8399\Cad\Current Dwg 2%Civil\SKETCH PLANS\SK-3-4.dwg Last modified by: vhm

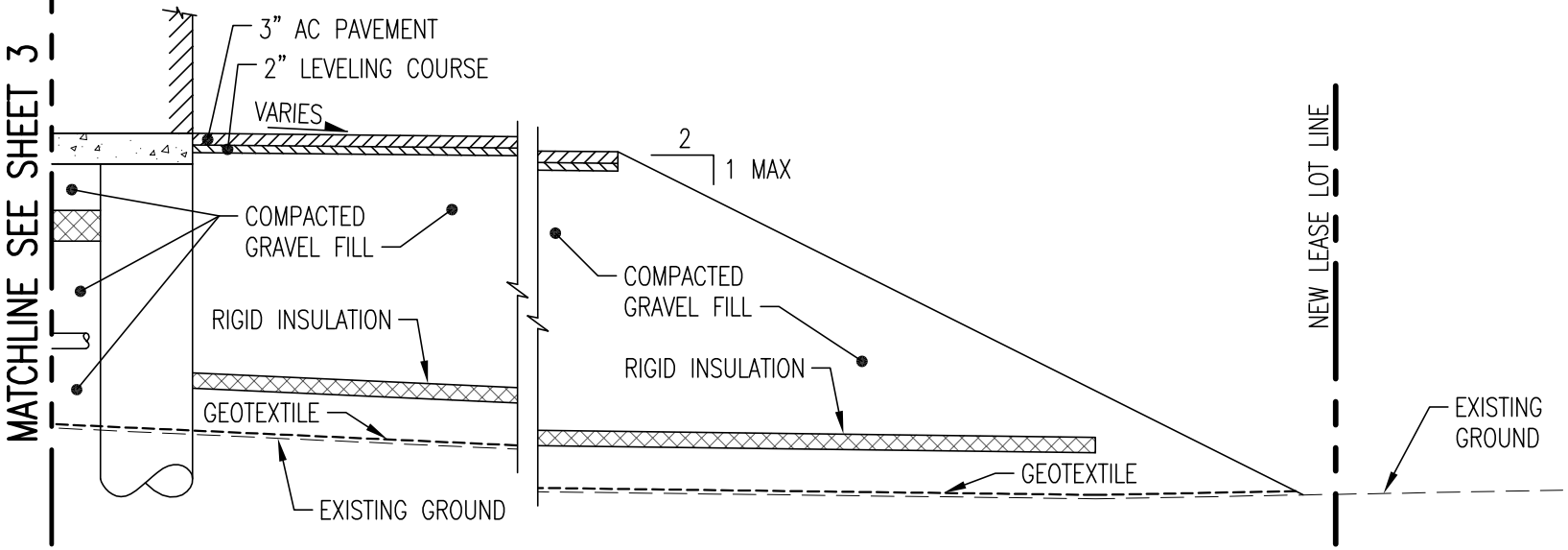

A 2|4 SITE SECTION

SCALE: NTS

SHEET NO.: 4 OF 4

ENTERPRISE ENGINEERING, INC.

5 DEPOT STREET
SUITE 23
FREEPORT, ME 04032
TEL. (207) 869-8006
FAX (207) 869-8015

2525 GAMBELL STREET
SUITE 200
ANCHORAGE, AK 99503
TEL. (907) 563-3835
FAX (907) 563-3817

APPLICANT: NORTH SLOPE BOROUGH
FILE NO.: POA-XXX-XXX
WATERWAY: NUNAVAK BAY – FRONTAL CHUKCHI SEA
(HUD 12: 190602020203)
PROPOSED ACTIVITY: SEARCH AND RESCUE (SAR) HANGAR
SEC. 5 T22N R18W U.M
LAT.: 71°17'15" N LONG.:156°45'14" W
DATE: 7/10/2015

Plot Date: Jul 10, 2015 - 2:22pm Drawing File: P:\projects\8399\Cad\Current Dwg 2%Civil\SKETCH PLANS\SK-3-4.dwg Last modified by: vhm

POA-2015-323
North Slope Borough
Istatkoak Lagoon
Sheet 4 of 4